No. of Contacts	DIMENSIONS A	B
2	1.27	2.54
3	2.54	3.81
4	3.81	5.08
5	5.08	6.35
6	6.35	7.62
7	7.62	8.89
8	8.89	10.16
9	10.16	11.43
10	11.43	12.70
11	12.70	13.97
12	13.97	15.24
13	15.24	16.51
14	16.51	17.78
15	17.78	19.05
16	19.05	20.32
17	20.32	21.59
18	21.59	22.86
19	22.86	24.13
20	24.13	25.40
21	25.40	26.67
22	26.67	27.94
23	27.94	29.21
24	29.21	30.48
25	30.48	31.75
26	31.75	33.02
27	33.02	34.29
28	34.29	35.56
29	35.56	36.83
30	36.83	38.10
31	38.10	39.37
32	39.37	40.64
33	40.64	41.91
34	41.91	43.18
35	43.18	44.45
36	44.45	45.72
37	45.72	46.99
38	46.99	48.26
39	48.26	49.53
40	49.53	50.80
50	62.23	63.50

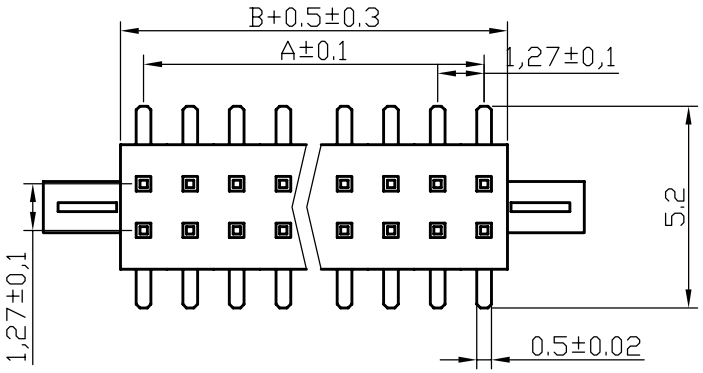

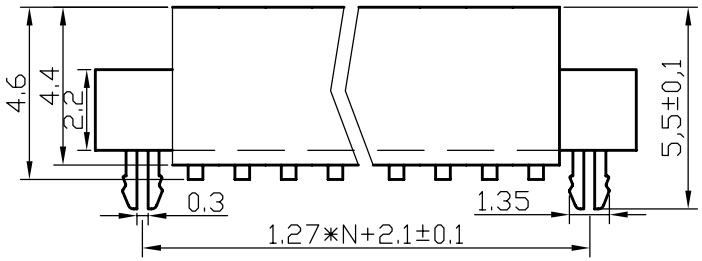

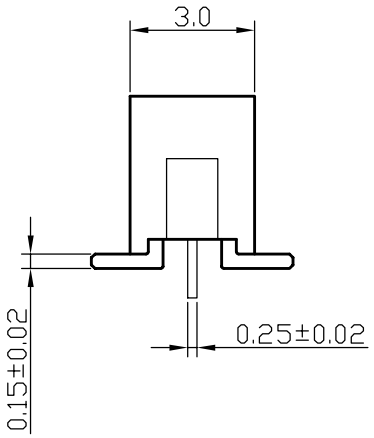

SPECIFICATIONS

Contacts: Phosphor Bronze
Current Rating: 3Amps
Insulator Resistance: 1000MΩ Min
Dielectric Withstanding: AC 500V
Operating Temperature: −40°to+105° Max
processing Tenperature: 230°for 30−60

seconds
Contact Material: Copper alloy
Contact Resistance: 20mΩ At DC 1A
Insulator Material: Polyester
Standard: NL−6T
Finish : Tin,Gold or Duplex plated
Standard : Gold flash all over
Note :
Duplex plating : Gold plated on contact area,
Tin on solder area

Recommended P.C.B Hole Layout

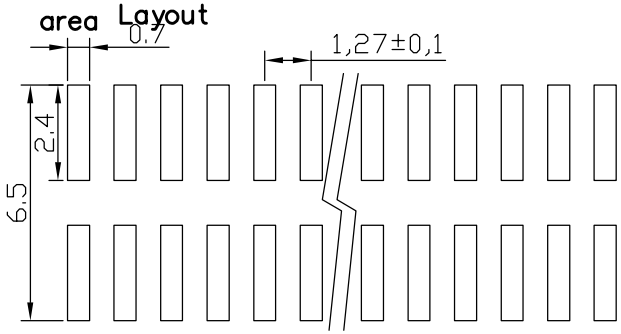

???????

PF − 1.27 H − 4.4 2*NPIN SMT

UNLESS OTHEWIXE SPECIFIED TOLERANCE ANG ±5° 0 ±0.3 .0 ±0.2 .00 ±0.10		??????????? ShenZhen nestech Electronics Ltd
SCALE	UNIT: mm	22286−755−2748−3253
DRAWN ???	03/15/05	DRAWING NAME: Pin header 1.27mm*1.27mm*2
CHECKED		??186−755−2997−5588
APPROVED	/ /	PRODUCT NO.
	SIZE A4 REV A	FILE NAME: